E8W无线扩音器中英文说明书 折叠方式：对折再风琴折 材质：80G 书写纸 折后尺寸：100X142MM 展开尺寸：600X284MM 印刷方式：双面印单黑

TAKSTAR®得胜

E8W 无线扩音器
Wireless Amplifier

使用手册 User Manual

1

■ 前言

尊敬的用户：

感谢您选购得胜E8W无线扩音器，为了您能够更好的了解使用本产品，建议您在使用前仔细阅读本说明书。

若存在有疑问或者您有宝贵的建议，可通过拨打得胜官方服务热线400 6828 333或微信扫描二维码关注得胜官方公众号与我们联系。

■ 产品特性

- 一款便携式大功率无线扩音器，适用于教学、导游、培训、促销等场合
- 选用稀土材质扬声器，18W大功率，音质好、声音大
- 采用UHF无线技术，在无干扰、无障碍下使用距离约40米
- 可调频，40个精选频道，支持多套扩音器同时使用
- 配备无线手持麦克风和无线头戴麦克风，采用自动对频技术，操作简便，抗干扰性强
- 无线头戴麦克风支持高/低功率切换，可根据不同使用环境灵活调整
- 具有音乐播放功能，支持无线播放、U盘、TF存储卡上的多媒体音频文件播放
- 扩音器内置大容量锂离子电池，使用时间约12小时
- 特殊的技术结构设计，产品具有防粉尘功能，使产品质量更稳定耐用

■ 适用范围

- 适用于教学、导游、培训、促销等场合

■ 产品配置

- 扩音器主机.....1个
- 有线头戴麦克风.....1个
- 无线头戴麦克风.....1个（选配）
- 手持麦克风.....1支（选配）
- 肩带.....1条
- 充电线.....1条
- 说明书.....1份

■ 技术参数

主机参数

- 频率响应：80Hz-12kHz
- 峰值功率：18W
- 扬声器阻抗：4Ω
- UHF频率：630MHz-698MHz（分段）
- UHF使用距离：空旷地带40米
- 媒体播放：TF卡，U盘，支持 64G及以下
- 媒体格式：MP3、WAV
- 电池类型：锂离子电池
- 电池规格：3.7V/4000mAh
- 充电规格：USB 5V/1000mA
- 充电时间：约4小时
- 使用时间：12小时左右
- 产品规格：125×105×55mm
- 单机重量：约340g

发射器（头戴麦克风）

- 拾音器：背极式驻极体
- 指向性：单指向
- 频率响应：60Hz-16kHz
- 灵敏度：-51至-54dB (0db=1V/Pa/m at 1kHz)
- UHF频率：630MHz-698MHz（分段）
- UHF使用距离：空旷地带40米
- 电池类型：锂离子电池
- 电池容量：3.7V/400mAh
- 充电规格：USB 5V/200mA
- 充电时间：约2.5小时
- 使用时间：约5小时
- 单机重量：约38g

■ 技术参数

发射器（手持麦克风）

- 拾音器：背极式驻极体
- 指向性：单指向
- 频率响应：60Hz-16kHz
- 灵敏度：-51至-54dB (0db=1V/Pa/m at 1kHz)
- UHF频率：630MHz-698MHz（分段）
- UHF使用距离：空旷地带40米
- 电池类型：锂离子电池
- 电池容量：3.7V/1800mAh
- 充电规格：USB 5V/1000mA
- 充电时间：约2.5小时
- 使用时间：约15小时
- 单机重量：约150g

注：以上数据由得胜实验室测试得到，并拥有最终解释权！

■ 功能示意

扩音器

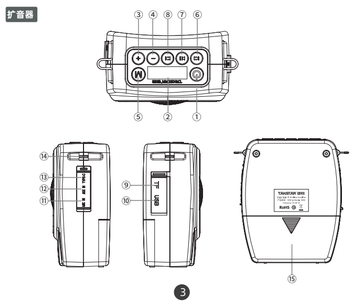

① 电源开关：长按开启/关闭扩音器。

② LED显示屏：显示当前的工作模式、电池电量等信息。有五种工作模式，分别为蓝牙模式、USB模式、TF卡模式、音频输入模式、录音模式。“”为电池电量符号，当电池电量充足时，电量符号不显示；当电池符号闪烁预警时，表示电池电量不足，需及时充电。充电时，电池电量符号亮起，充满电时，电池电量符号熄灭。15分钟后无任何操作时，显示屏出现“————”符号，表示扩音器进入待机状态，按任意键即可唤醒。

③ 音量“+”按键：点按该按键音量逐渐增大。

④ 音量“-”按键：点按该按键音量逐渐减小。

⑤ “M”模式切换键：开机状态下，短按该键可切换工作模式，并伴随相应的语音提示。当接入AUX音源或插入TF卡时，以音频输入模式或TF卡模式为优先。在插有储存器及接通麦克风的情况下，长按此键进入录音模式并且显示屏出现“ REC”符号及语音提示“录音模式”。录音过程显示屏“00：00”数值变动，表示录音时长，录制完成时长按此键可退出并保存录音。退出录音模式后，会自动循环播放刚才的录音。

⑥ ⏮ 上一曲按键：短按切换上一曲，长按可减少混响效果。

⑦ ⏯ 播放/暂停按键：短按该键控制音乐的播放及暂停，长按该按键进入/退出单曲循环模式;蓝牙模式下，长按该按键退出蓝牙模式。

⑧ ⏭ 下一曲按键：短按切换下一曲，长按可增加混响效果。

⑨ TF卡插槽：按照正确插卡方向插入TF内存卡。插入时，听到“哒”一声，表示已安装到位；取卡时把卡往下按压，听到“哒”一声，TF内存卡将自动弹出来。

提示：请确保TF卡中储存的是MP3、WAV格式的音频文件，否则不能正常读取歌曲文件甚至会有损坏机器的风险；拷入歌曲前请先将TF卡按FAT16、FAT32格式进行格式化，其他方式的格式化（如exFAT、NTFS格式）会导致录音无法保存或者储存的歌曲无法播放。

⑩ U盘插孔：可将存放有音乐文件的U盘插入此孔进行播放。

⑪ MIC IN输入接口：将有线麦克风插头插入此孔，进入有线人声扩音状态。操作时，请不要将麦克风的拾音面朝向扩音器的扬声器，以免产生啸叫。

广东省电声工程技术研究开发中心
广东得胜电子有限公司制造

地址：广东省惠州市博罗县龙溪街道富康一路2号
服务热线：400 6828 333　传真：0752 6383950
邮箱：xs@takstar.com
网址：www.takstar.com

Guangdong Takstar Electronic Co., Ltd.
Address: No. 2 Fu Kang YiRd., Longxi Boluo
Huizhou, Guangdong 516121 China
Tel: 86 752 6383644　Fax: 86 752 6383952
Email: sales@takstar.com
Website: www.takstar.com

扫一扫，了解更多产品
Scan for more
product information

⑫ AUX IN输入接口：通过Φ3.5mm音频连接线与手机、电脑、平板、MP3等播放设备连接，可将扩音器作为有源音箱使用。

⑬ 充电接口：连接Type-C数据线，请使用规范5V/1A且经过3C认证的充电头为扩音器充电。

⑭ 挂扣：用于安装肩带，可将扩音器斜挂于肩上使用。

⑮ 电池仓：内置3.7V/4000mAh大容量锂离子电池。

手持麦克风

① 电源开关：长按该按键1秒后开机，长按该按键2秒后关机；关机状态下，长按5秒电源键，则麦克风进入对频状态；配对成功后短按该按键1下，则麦克风进入变频状态。

② 指示灯：开机状态下，指示灯显示蓝灯，表示麦克风电量正常；指示灯红灯闪烁时，表示麦克风电量不足，请及时为麦克风充电；充电时，指示灯红灯长亮；红灯熄灭，表示电已充满。麦克风关机状态下，长按5秒电源键进入配对状态，并伴随指示灯蓝灯闪烁，表示麦克风处于对频状态；对频成功后，指示灯恢复蓝灯长亮。

③ 充电接口：通过连接Type-C充电线为麦克风充电。

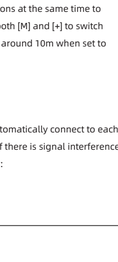

头戴麦克风

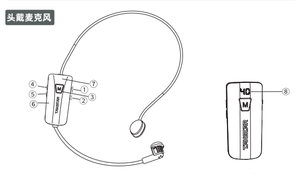

头戴麦克风　　显示屏

① 电源开关：拨动开关至“ON”位置时开机，拨开关至“OFF”位置时关机。

② 充电接口：将Type-C充电线插入此孔，另一端连接通用的USB输出充电器，即可进行充电。

③ “M”频道切换按键：用于调频操作，详见本说明书的“对频方法”部分。

④ “+”按键：点按增加麦克风音量；在对频状态下，点按切换上一个频道，长按快速跳转频道。

⑤ “-”按键：点按减小麦克风音量；在对频状态下，点按切换下一个频道，长按快速跳转频道。

⑥ 指示灯：关机未充电时，指示灯熄灭；开机时长亮蓝灯；电量充足时，指示灯长亮蓝灯；电量不足时，指示灯闪烁蓝灯；充电过程中，红灯长亮，充满后红灯熄灭。

⑦ LED显示屏：显示当前工作频道、麦克风音量大小、功率切换等状态。

⑧ 工作频道/麦克风音量大小：默认显示当前工作频道，有“01-40”共40个工作频道；当点按音量“+”、“-”键时，则显示音量大小，有“U1-U9”共9级音量，3秒后回复正常数值；10秒后无任何操作，显示屏将自动熄灭。

⑨ 高低功率切换：同时点击“M”按键和“-”按键为低功率，同时显示屏会显示低功率的提示“E0”，同时点击“M”按键和“+”按键为高功率，同时显示屏会显示低功率的提示“E1”。（低功率无线使用距离在10米左右，高功率无线使用距离在40米左右）

■ 使用说明

一、对频方法

产品出厂时已默认配对好，开机会自动连接，无需配对。如遇有信号干扰，可按下面方法进行重新配对或变频。

手持麦克风：

① 手持麦克风关机状态下，长按5秒电源键进入配对状态，指示灯蓝灯闪烁，则进入对频状态。此时立刻打开扩音器电源开关，等待手持麦克风从蓝灯闪烁变成长亮时，对着麦克风说话有声音，表示配对成功。

② 如果对着手持麦克风说话没声音，即说明配对不成功，请按照上面方法重新配对。

2. 变频方法

① 打开扩音器及手持麦克风电源开关，按“对频方法”配对成功后，单击手持麦克风上的电源键进行变频，指示灯蓝灯快速闪烁2下后恢复长亮，表示自动变频成功。

头戴麦克风：

1. 配对方法

① 首先确保头戴麦克风及扩音器都在关机状态。然后打开头戴麦克风电源开关，长按麦克风“M”键3秒，显示屏循环转圈时松开，此时立刻打开扩音器电源开关，等待麦克风的显示屏从转圈变为静态数值，对着麦克风说话有声音，表示配对成功；如果麦克风进入对频状态后，10秒钟内没有打开扩音器电源开关，对频失败，显示屏从转圈变为静态数值。

② 如对着头戴麦克风说话没声音，说明配对不成功，请按上面方法重新配对。

2. 变频方法

打开扩音器及头戴麦克风电源开关，确保在对频成功的情况下，短按头戴麦克风上的“M”键进入变频，显示屏数值闪烁，此时点按音量“+”、“-”切换上、下频率，或长按快速跳转频道，再点按“M”键确认频率，如3秒钟无操作“M”键确认，频率停止闪烁并固定在当前选择的频率。

二、蓝牙配对

首次使用本机时，需要与手机或蓝牙设备配对连接，步骤如下：

① 先打开扩音器电源开关，点按“M”键切换成蓝牙模式，显示屏出现“BLUE”工作模式时，表示蓝牙正在搜索配对状态。

② 进入手机“设置”菜单，找到蓝牙功能选项，开启手机的蓝牙功能，待搜索到“TAKSTAR E8W”，点击“TAKSTAR E8W”进行连接，当扩音器出现提示音“蓝牙已连接”，表示蓝牙连接成功，手机、笔记本、平板、IPAD等设备蓝牙连接扩音器成功后，可实现播放音乐功能。

③ 下次开机后点按“M”键开启蓝牙模式时，将自动回连最后一次使用的蓝牙设备，并提示“蓝牙已连接”。

■ 安全警示

为避免电击、高温、着火、辐射、爆炸、机械危险以及使用不当等可能造成的人身伤害或财产损失，使用本产品前，请仔细阅读并遵守以下事项：

1. 使用产品时请确认所连设备与本产品是否匹配以及合理调整音量大小，不要在超过产品功率及大音量下长时间使用，以免造成产品异常；

2. 使用中若发现有异常（如冒烟、异味等），请立即关闭电源开关并拔掉电源插头，然后将产品送售后服务网点检修；

3. 消费者若使用电源适配器供电，则应购买配套使用获得CCC认证并满足标准要求的电源适配器；

4. 本产品及附件都应放置在室内干燥通风处，请勿长期存放在潮湿、灰尘多的环境，使用中避免靠近火源、雨淋、进水、过度碰撞、抛掷、振动本机及覆盖通风孔，以免损坏其功能；

5. 若产品需要固定于墙壁或天花板时，请确保固定到位，防止因固定强度不足导致产品发生跌落危险；

6. 使用该产品时需遵守相关安全规定，法律法规明确禁止使用场合请勿使用本产品，以免导致意外事故；

7. 请不要自行拆机改装或维修，以防止出现人身伤害，如有问题或服务需求请联系当地售后服务网点跟进处理。

■ 关于图标含义解释

此符号表示，根据WEEE指令(2012/19/EU)和国家法律，由于这种类型的废弃物会有潜在的有害物质，可能对环境和人类健康产生负面影响，所以本产品不应与您的家庭垃圾一起处置，应将本产品应交由授权的电气和电子设备（WEEE）回收站回收。同时，您在正确处理本产品的同时将有助于自然资源的有效利用。如需了解更多有关您可以在何处放置废物回收设备的信息，请联系您当地的城市办事处、废物管理局或家庭废物处理服务部门。

■ 环保说明

产品中有毒有害物质或元素的名称及含量标识表

部件名称	有毒有害物质或元素					
	铅 (Pb)	汞 (Hg)	镉 (Cd)	六价铬 (Cr(VI))	多溴联苯 (PBB)	多溴二苯醚 (PBDE)
塑料部件	○	○	○	○	○	○
金属部件	×	○	○	○	○	○
电路板组件	×	○	○	○	○	○
线缆	×	○	○	○	○	○

本表格依据SJ/T 11364的规定编制。

○：表示该有害物质在该部件所有均质材料中的含量均在GB/T 26572规定的限量要求以下。

×：表示该有害物质至少在该部件的某一均质材料中的含量超出GB/T 26572规定的限量要求。

此标志为产品的环保使用期限标志。
自此标保使用期限只适用于产品正常工作的温度和湿度等条件。

■ 关于本说明书

本说明书中内容符合截止印刷之日的技术规格。由于得胜公司会不断改进产品，本说明书可能不符合您的特定产品的技术规格。要获取最新版说明书，请访问得胜官网，然后下载说明书文件。技术规格、设备或另售的附件在各个地区可能有所不同，如有问题请与当地得胜销售网点确认。如需更多支持和深层产品信息，请浏览得胜官方网站：
https://www.takstar.com

产品服务保证书

姓名：　电话：　地址：
商品：　型号：　购买日期：　年　月　日

维修记录栏（由维修员填写）	维修员签名	日期

◆广东得胜电子有限公司 ◆电话：400-6828-333 ◆地址：广东省惠州市博罗县龙溪街道富康一路2号

注意事项：

1. 本单为保修凭证，请用户妥善保管，如有遗失，恕不保修或退换。
2. 保修期限为：自买之日起7个工作日内退换货，15个工作日内提供维修服务。
3. 除产品质量问题外，因人为损坏、自然灾害等不可抗力因素造成的损坏，维修均需收费。
4. 如属保管不善或使用不当造成的损坏，维修均需收费。
5. 量自行拆卸维修者，不予保修。
6. 无此保修卡者恕不提供中国大陆范围（不包含港澳台地区）。

■ Preface

Dear Customer,

Thank you for purchasing Takstar E8W Wireless Amplifier. In order to better understand and use the product, please read this manual carefully. If you have any questions or suggestions, please contact our local dealer.

■ Features

- High-power portable wireless amplifier, suitable for teaching, tour guide, training and sales.
- Rare-earth speaker with 18W high power, excellent audio quality and loud output.
- UHF wireless technology, about 40m use range in area without obstruction and interference.
- Adjustable frequencies, 40 selected channels available, supporting multiple amplifiers used simultaneously.
- With wireless handheld or headset mic that utilizes automatic frequency sync and resists interference.
- High/Low power setting switchable on wireless headset mic, flexible in different environments.
- Supports wireless playback, USB playback and TF card playback of multimedia files.
- Built-in large-capacity lithium-ion battery lasts around 12hrs operation.
- Special structure design makes it dust-proof, thus more durable and stable to use.

■ Application

- Teaching, tour guide, training, sales, etc.

■ Package Contents

- Voice Amplifier.....1 PCS
- Wired Headset Microphone.....1 PCS
- Wireless Headset Microphone.....1 PCS (optional)
- Handheld Microphone..... 1 PCS (optional)
- Strap.....1 PCS
- Charging Cable.....1 PCS
- User Manual.....1 PCS

■ Specifications

Voice Amplifier

- Frequency Response: 80Hz-12kHz
- Peak Power: 18W
- Speaker Impedance: 4Ω
- UHF Use Distance: 40m in open area
- Battery Type: Li-ion
- Battery Capacity: 3.7V/4000mAh
- UHF Frequency: 630MHz-698MHz (segmented)
- Supported Media: TF card, USB drive, up to 64G
- Media Format: MP3, WAV
- Charging Specification: USB 5V/1000mA
- Charging Time: about 4 hours
- Playtime: about 12 hours
- Dimensions: 125×105×55mm
- Weight: about 340g

Transmitter (Headset Mic)

- Capsule: back electret
- Polar Pattern: unidirectional
- Frequency Response: 60Hz-16kHz
- Battery Type: Li-ion
- Battery Capacity: 3.7V/400mAh
- Sensitivity: -51 to -54dB (0db=1V/Pa/m at 1kHz)
- UHF Frequency: 630MHz-698MHz (segmented)
- UHF Use Distance: about 40m in open area
- Charging Specification: USB 5V/200mA
- Charging Time: about 2.5 hours
- Playtime: about 5 hours
- Weight: about 38g

■ Specifications

Transmitter (Handheld Mic)

- Capsule: back electret
- Polar Pattern: unidirectional
- Frequency Response: 60Hz-16kHz
- Battery Type: Li-ion
- Battery Capacity: 3.7V/1800mAh
- Sensitivity: -51 to -54dB (0db=1V/Pa/m at 1kHz)
- UHF Frequency: 630MHz-698MHz (segmented)
- UHF Use Distance: 40m in open area
- Charging Specification: USB 5V/1000mA
- Charging Time: about 2.5 hours
- Playtime: about 15 hours
- Weight: about 150g

Note: The above data are measured by Takstar laboratory which has the final interpretation right!

■ Function Descriptions

Voice Amplifier

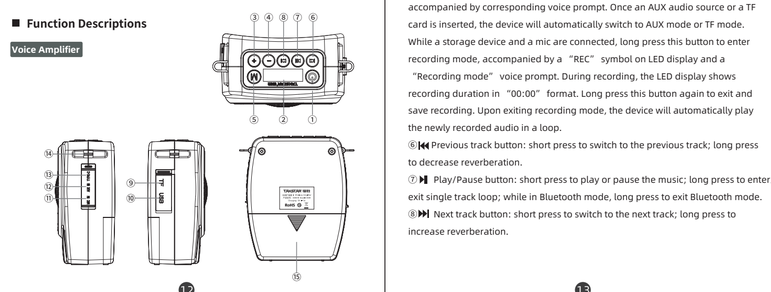

① Power switch: long press to power on/off the amplifier.

② LED display: display information such as the current work mode and battery level. There are five work modes, which are Bluetooth mode, USB mode, TF mode, AUX input mode and Recording mode. “” is the battery level symbol which does not show when power is sufficient, but flashes when power is low and requires charging in time. While charging, the battery symbol appears and then disappears when fully charged. “————” shows up when the amplifier is idle for 15 minutes and enters standby status. Press any key to wake up the amplifier.

③ Volume + button: press to increase the volume level.

④ Volume - button: press to decrease the volume level.

⑤ M mode button: when powered on, short press it to switch among work modes, accompanied by corresponding voice prompt. Once an AUX audio source or a TF card is inserted, the device will automatically switch to AUX mode or TF mode. While a storage device and a mic are connected, long press this button to enter recording mode, accompanied by a “REC” symbol on LED display and a “Recording mode” voice prompt. During recording, the LED display shows recording duration in “00:00” format. Long press this button again to exit and save recording. Upon exiting recording mode, the device will automatically play the newly recorded audio in a loop.

⑥ ⏮ Previous track button: short press to switch to the previous track; long press to decrease reverberation.

⑦ ⏯ Play/Pause button: short press to play or pause the music; long press to enter/exit single track loop; while in Bluetooth mode, long press to exit Bluetooth mode.

⑧ ⏭ Next track button: short press to switch to the next track; long press to increase reverberation.

⑨ TF card slot: insert a TF memory card following the labeled direction until you hear a click to install it in place. To remove the TF card, press it down until it clicks to eject the card.

Tip: Please make sure the audio files in the TF card are stored in MP3 and/or WAV format, otherwise it won't be readable and may even damage the device. Please format the TF card to FAT16 or FAT32 file system before copying songs, because other file system (e.g., exFAT, NTFS) will cause failure to save recordings or play songs.

⑩ USB interface: insert a USB flash drive to play audio files.

⑪ MIC input: insert a wired mic to start wired voice amplification. Do not point the mic capsule towards the loudspeaker to avoid feedback.

⑫ AUX input: connect to a playback device (e.g., phone, tablet, MP3 player) via a Ø3.5mm audio cable, so to use the amplifier as an active speaker.

⑬ Charging port: charge the amplifier via a Type-C charging cable. Please use a standard 3C-certified 5V/1A adapter to charge the amplifier.

⑭ Strap clip: used to install the shoulder strap for wearing the amplifier across shoulder.

⑮ Battery compartment: 3.7V/4000mAh Li-ion battery inside.

Handheld Microphone

① Power button: long press for 1s to power on, or long press for 2s to power off. When powered off, long press for 5s to start pairing. When paired successfully, press once to change frequency.

② Indicator light: lights up blue when powered on and battery level is normal; flashes red if low power and requires charging; illuminates solid red while charging and goes off when fully charged; flashes blue while pairing (hold the power button for 5 seconds when powered off), and resumes solid blue once paired successfully.

③ Charging port: charge the mic via a Type-C charging cable.

Headset Microphone

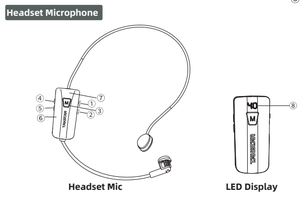

Headset Mic　　LED Display

① Power switch: toggle switch to ON or OFF to power on or off respectively.

② Charging port: connect to a Type-C cable with a power adapter for charging.

③ M button: used for changing frequency, refer to “Pairing Method” section for details.

④ [+] button: press to increase mic volume. In pairing mode, press or long press to gradually/rapidly change to previous channels.

⑤ [-] button: press to decrease mic volume. In pairing mode, press or long press to gradually/rapidly change to next channels.

⑥ Power indicator: light's off when the power is off and not charging; lights up solid blue when powered on and power is sufficient; flashes blue if low power; illuminates red while charging and goes off when fully charged.

⑦ LED display: display info such as working channel, mic volume and power setting.

⑧ Working channel/mic volume: display the current operating channel by default; 40 working channels in total, “01-40”. Volume level is displayed for 3s when you press volume [+]/[-] button, 9 levels in total, “U1-U9”. LED display goes off automatically after 10s without any operation.

⑨ High/Low power switch: press both [M] and [-] buttons at the same time to switch to low power, LED display shows E0; or press both [M] and [+] to switch to high power, LED display shows E1. (Use distance is around 10m when set to low power, or around 40m when set to high power)

■ Operation Instructions

A. Pairing Method

The products are paired by factory default and will automatically connect to each other once powered on. No extra pairing is required. If there is signal interference, follow the below steps to re-pair or change frequency:

Handheld Microphone:

1. Pairing Method

① When the handheld mic is powered off, hold the power button for 5 seconds to enter pairing mode, indicated by flashing blue LED indicator. Meanwhile, immediately power up the amplifier, wait until the flashing LED on handheld mic turns solid blue to finish pairing. You should be able to hear voice amplification when talking to the mic.

② If there is no sound when you talk to the handheld mic, that means the pairing is not successful, please retry the above steps to re-pair.

2. Changing Frequency

① Power up both the amplifier and handheld mic. After successfully paired, press the power button on the mic once to change frequency. If successful, the blue indicator should flash for 2s before resuming solid blue.

Headset Microphone:

1. Pairing Method

① First, power off both the headset mic and the amplifier. Next, power up the headset mic, long press mic [M] button for 3s until its LED display shows a circle. Then, immediately power up the amplifier, wait until the headset mic's LED circle changes into a static number. Talk towards the mic to test if your voice is amplified and if pairing is successful. If the amplifier is not powered on within 10s after the mic enters pairing mode, the mic will exit pairing mode and its LED circle will change back to a static number.

② No sound when talking to the headset mic means the pairing is not successful, please retry.

2. Changing Frequency

① Make sure that the headset mic and the amplifier are already paired, then power up both devices at the same time. Press the mic [M] button to change frequency, and the channel number on headset LED display will flicker. Then, press or long press volume [+]/[-] button to cycle through frequency gradually/rapidly, and press [M] again to confirm frequency, or leave it auto confirmed after 3s idleness.

B. Bluetooth Pairing

Upon first use, you need to connect this device to your phone or Bluetooth device, following below steps:

① Power up the amplifier, press [M] to switch to Bluetooth mode and start Bluetooth discovery and pairing, indicated by a “BLUE” symbol.

② Enter SETTINGS menu on your phone, find and enable Bluetooth, wait until “TAKSTAR E8W” is discovered and tap on it to connect. When connected successfully, there will be a voice prompt about “Bluetooth Connected”. Devices such as cell
phones, laptops, tablets, and iPads can play music via Bluetooth thereafter.

③ The next time you switch to Bluetooth mode, the amplifier will automatically connect to the previously paired device, signaled by a voice prompt “Bluetooth connected”.

■ Safety Instructions

To avoid electric shock, overheat, fire, radiation, explosion, mechanical risk and injury or property loss due to improper use, please read and observe the following items before use:

1. Please check if the power of the connected equipment matches with that of this product before operation. Adjust the volume to proper level during operation. Do not operate at over-power or high-volume level for extended time to avoid product malfunction.

2. If there is any abnormality during use (e.g., smoke, strange odor), please kill the power switch and unplug from power source, then send the product to the local after-sales service for repair.

3. Power adapter used, if any, should be approved by CCC certification or similar standards and comply with the power supply requirements.

4. Keep this product and its accessories in a dry and ventilated area. Do not store in a humid or dusty area for extended time. Keep away from fire, rain, liquid intrusion, bumping, throwing, vibrating, or from blocking any ventilation openings, to prevent malfunction.

5. The product must, when installed on walls or ceilings, be fixed firmly in place at adequate strength to prevent from falling.

6. Please abide by safety rules during operation. Do not use the product in places prohibited by laws or regulations to avoid accident.

7. Do not disassemble or repair the product by yourself to avoid injury. If you have any questions or require any services, please contact our local after-sales service.

■ Label Meanings

This symbol indicates that this product should not be disposed of with your household waste, according to the WEEE directive (2012/19/EU) and your national law. This product should be handed over to an authorized collection site for recycling waste electrical and electronic equipment (WEEE). Improper handling of this type of waste could have a possible negative impact on the environment and human health due to potentially hazardous substances that are generally associated with WEEE. At the same time, your cooperation in the correct disposal of this product will contribute to the effective usage of natural resources. For more information about where you can drop off your waste equipment for recycling, please contact your local city office, waste authority, or your household waste disposal service.

■ About This Manual

This manual contains up-to-date technical specifications as of printing. However, specifications contained herein may not conform to your particular product since Takstar is constantly improving its products. Also, specifications, devices or accessories available may vary from region to region. If you have any questions, please contact our local sales outlet. For the latest version/more information, please visit our website: https://www.takstar.com/